WEIGUANG

# ECM53

## Series High-efficiency Motor











Hangzhou Weiguang Electronic Co.,Ltd

# INTRODUCTION

## Hangzhou Weiguang Electronic Co., Ltd.

[Stock code:002801], located in Linping District, Hangzhou City, is a national high-tech enterprise, a single champion demonstration enterprise of the Ministry of Industry and Information Technology, and a top 100 Chinese electronic component enterprise, specializing in R&D, production and sales of motors, fans, and drive control. Passed IS09001 quality management system certification, ISO14001 environmental management system certification, lS045001 occupational health and safety management system certification. It owns a national CNAS accredited laboratory, a provincial enterprise technology center, and a provincial research institute. The main products are refrigerator motors, axial fans, centrifugal fans, ECM motors, servo motors, etc. The products can be widely used in commercial refrigeration, air conditioning, air purifier, industrial cooling, power communication, energy storage, industrial automation, and other fields.



CNC Machining



Accurate Die casting



Plastic injection molding



PCBA SMT production line



Aerodynamic laboratory



Reliability laboratory

WEIGUANG











# Technical Overview

| | |
|---|---|
| Installation Dimension | Consistent with the conventional ECM motor / shaded pole motor |
| Voltage | 100-240 VAC |
| Output Power | 4~25W |
| Cover Material | Engineering plastic |
| Rotation Direction | Single Rotation CCW<br>Reverse when start (Optional )<br>Reverse on demand |
| Speed | Single speed/2 speed/Stepless speed |
| Insulation Class | Class F |
| Working ambient temperature | -30℃~+60℃ |
| Protection | Class II |
| Mode of operation | S1 |
| Installation Position | Any angle |
| IP Protection | IP65 |
| EMC/EMI | EN 60335-1 EN 60335-2-24 EN 60335-2-89<br>EN 55014-1 EN 61000-3-2 EN 61000-3-3 EN 55014-2 |
| Bearing | Ball bearing or sleeve bearing |
| Motor Protection | Software protection |
| Lifetime | 50,000 h |
| Approvals | CCC CE UL UKCA RoHS REACH |

# Motor Wiring Diagram

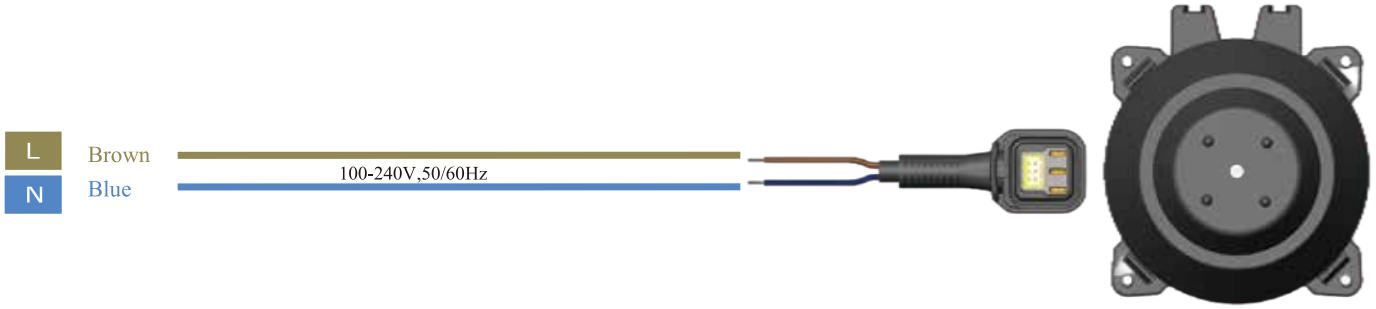


Standard

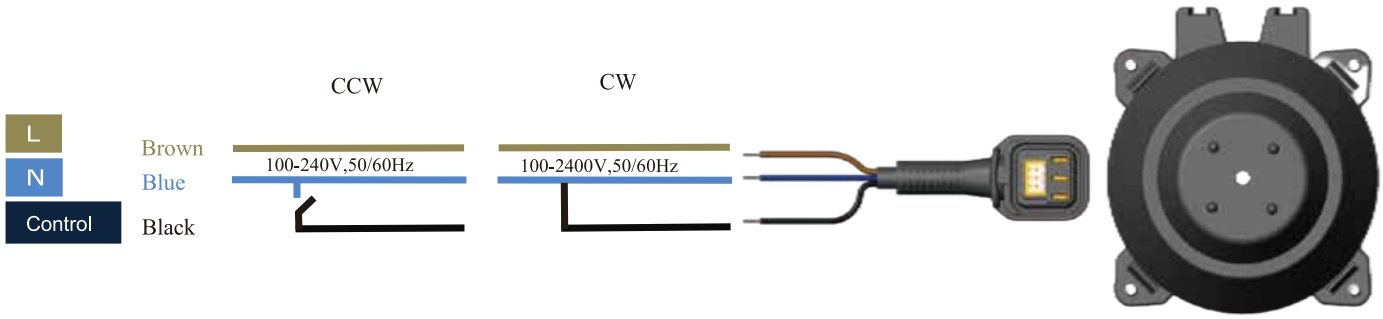


Reversible

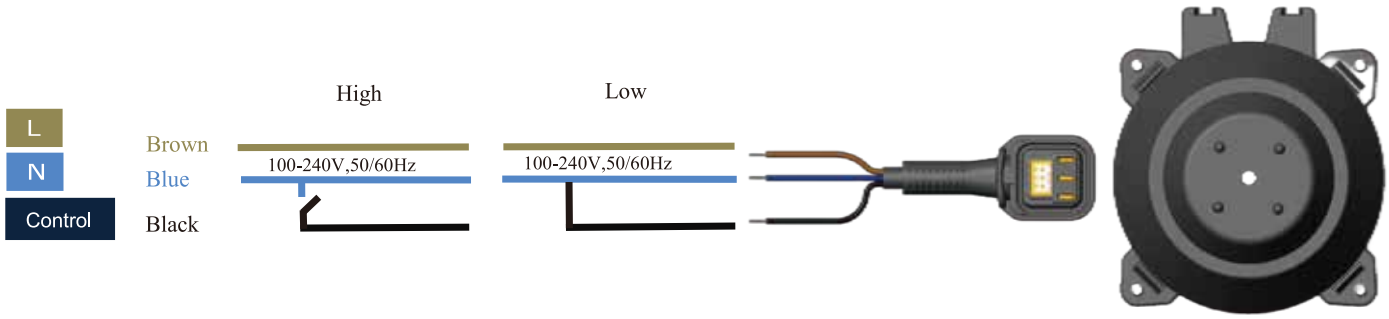


2 Speeds

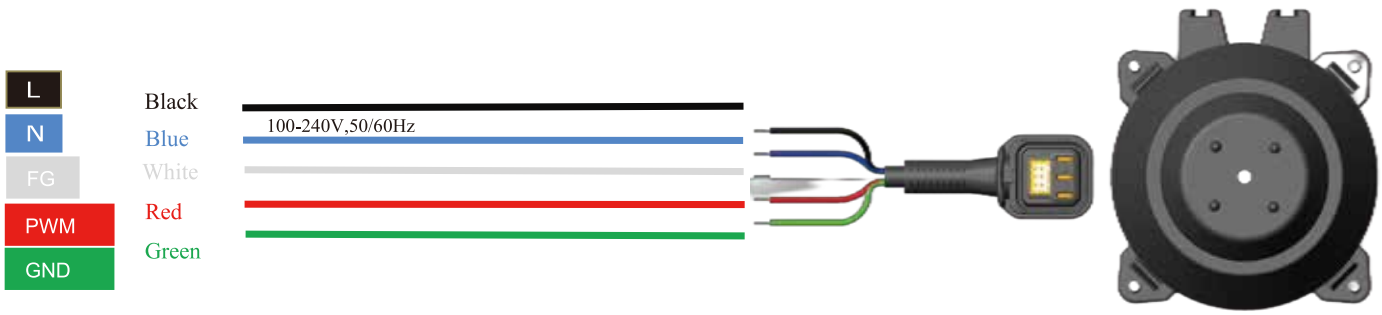


Stepless speed

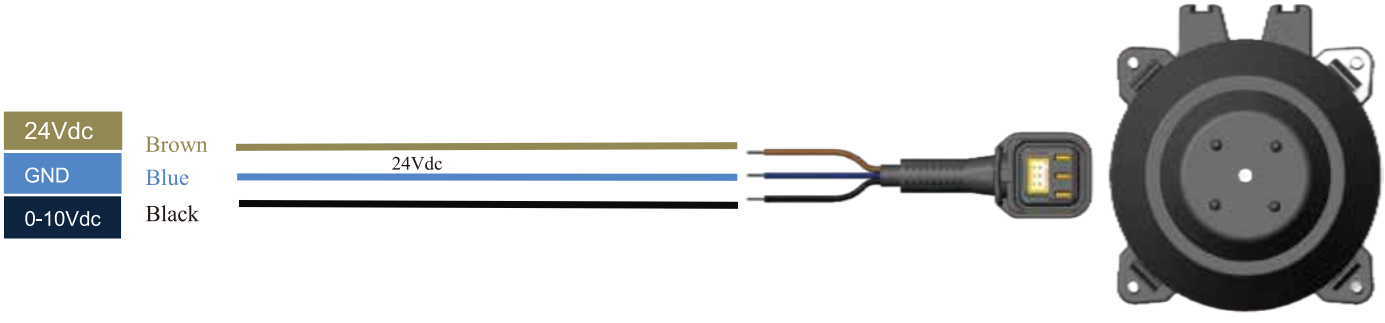


24Vdc

# Performance Parameter and Installation Dimensions

## Technical Specifications

| Model | Features | Voltage | Speed | Output capacity |
|---|---|---|---|---|
| | | V | r/min | W |
| ECM5310***S | Standard CW&CCW 2 Speed | 100~240VAC 24 VDC | 500~2300 | 4 |
| ECM5310***H | | | | 7 |
| ECM5312***L | | | | 9 |
| ECM5312***M | | | | 12 |
| ECM5312***H | Standard CW&CCW 2 Speed Stepless speed | | 500~2300 | 16 |
| ECM5312***Z | | | | 25 |

## Installation Dimensions

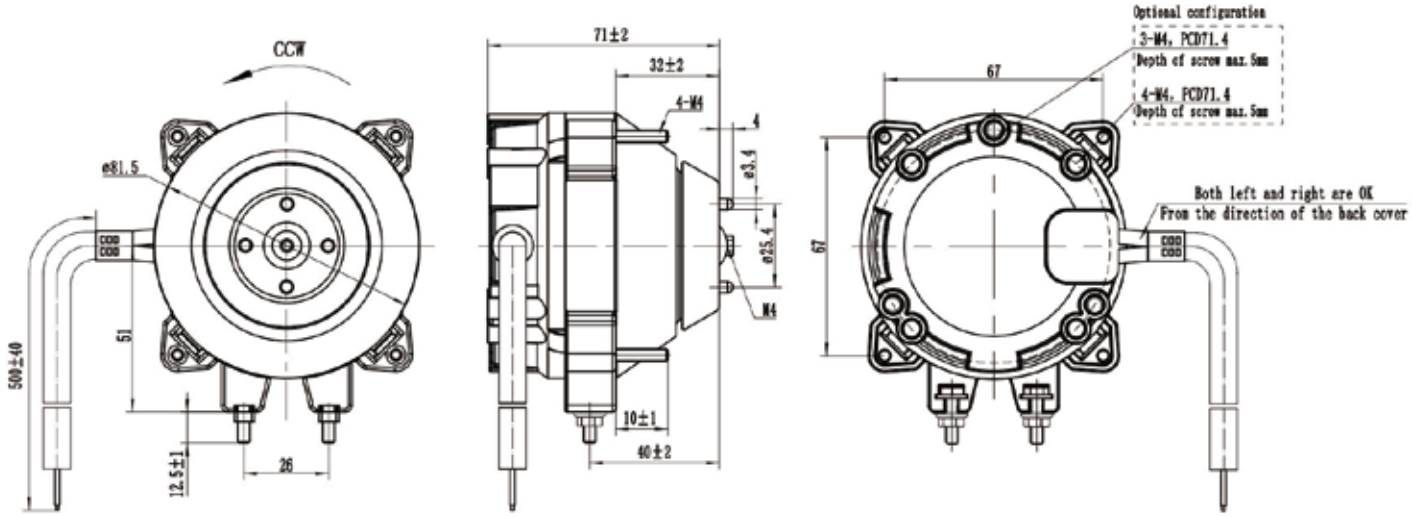


ECM53 Standard Model

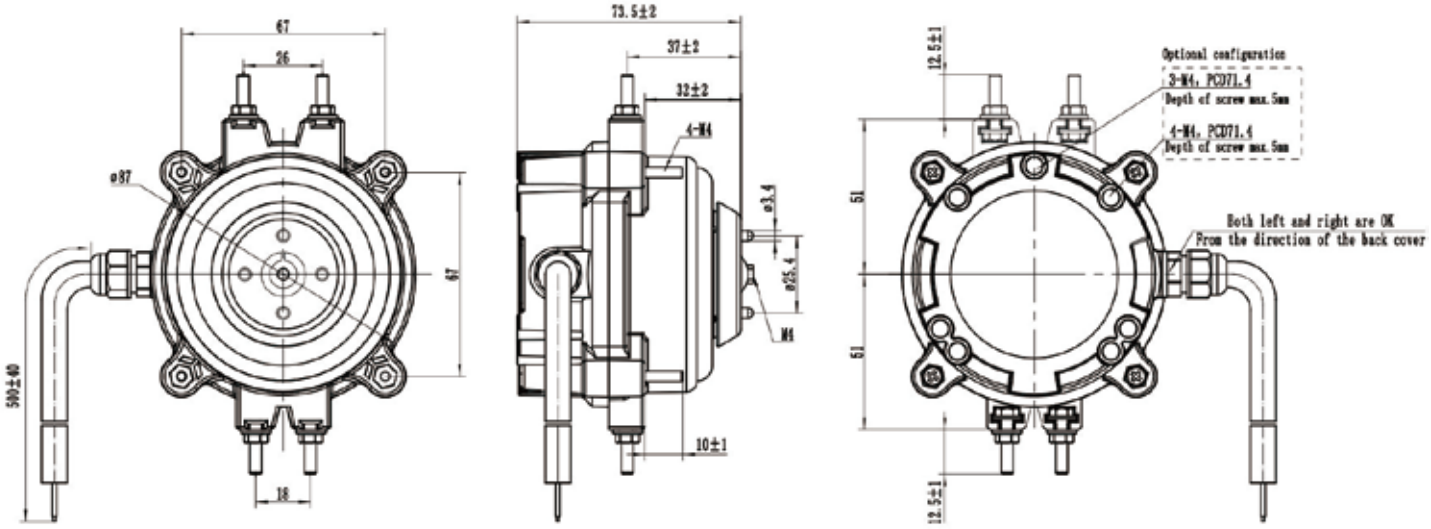


ECM53 High Power Model

# Load Selection Table

| ECM53**** | | | | | | |
|---|---|---|---|---|---|---|
| Speed | FAN Φ(mm) | | | | | |
| | Φ154 | Φ172 | Φ200 | Φ230 | Φ254 | Φ300 |
| Aluminium fan 1300r/min | 22° | 22° | 22° | 22° | 22° | 22° |
| | 25° | 25° | 25° | 25° | 25° | 25° |
| | 28° | 28° | 28° | 28° | 28° | |
| | 31° | 31° | 31° | 31° | 31° | |
| | 34° | 34° | 34° | 34° | 34° | |
| Aluminium fan 1450r/min | 22° | 22° | 22° | 22° | 22° | 22° |
| | 25° | 25° | 25° | 25° | 25° | |
| | 28° | 28° | 28° | 28° | 28° | |
| | 31° | 31° | 31° | 31° | 31° | |
| | 34° | 34° | 34° | 34° | 34° | |
| Aluminium fan 1550r/min | 22° | 22° | 22° | 22° | 22° | |
| | 25° | 25° | 25° | 25° | 25° | |
| | 28° | 28° | 28° | 28° | 28° | |
| | 31° | 31° | 31° | 31° | | |
| | 34° | 34° | 34° | 34° | | |
| Aluminium fan 1800r/min | 22° | 22° | 22° | 22° | 22° | |
| | 25° | 25° | 25° | 25° | | |
| | 28° | 28° | 28° | 28° | | |
| | 31° | 31° | 31° | 31° | | |
| | 34° | 34° | 34° | | | |
| | ECM5310*S | ECM5310*H | ECM5312*L | ECM5312*M | ECM5312*H | ECM5312*Z |

# ECM Crossflow Fans

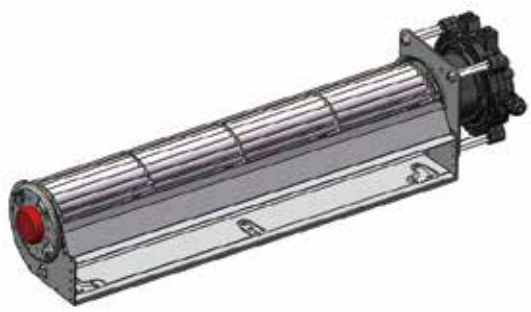

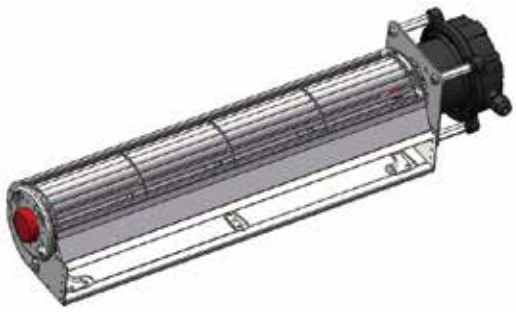

## Technical Specifications

| Model | Motor | Features | Voltage | Speed | Output capacity | Perm.amb.temp | Dimensions | | | | |
|---|---|---|---|---|---|---|---|---|---|---|---|
| | | | V | r/min | W | ℃ | A | B | C | D | E |
| 60-183 | ECM5310S | Standard 2 Speed | 100~240 VAC 24V DC | 500~ 2300 | 4 | -30℃~+60℃ | 56 | 180 | 184 | 257 | 153.5 |
| 60-240 | ECM5310H | | | | 7 | -30℃~+60℃ | 56 | 240 | 243 | 320 | 210.5 |
| 60-300 | ECM5312L | | | | 9 | -30℃~+60℃ | 56 | 300 | 303 | 380 | 270.5 |
| 60-360 | ECM5312M | | | | 12 | -30℃~+60℃ | 56 | 360 | 363 | 440 | 330.5 |
| 60-420 | ECM5312Z | | | | 25 | -30℃~+60℃ | 66 | 420 | 423 | 510 | 390.5 |

## Installation Dimensions

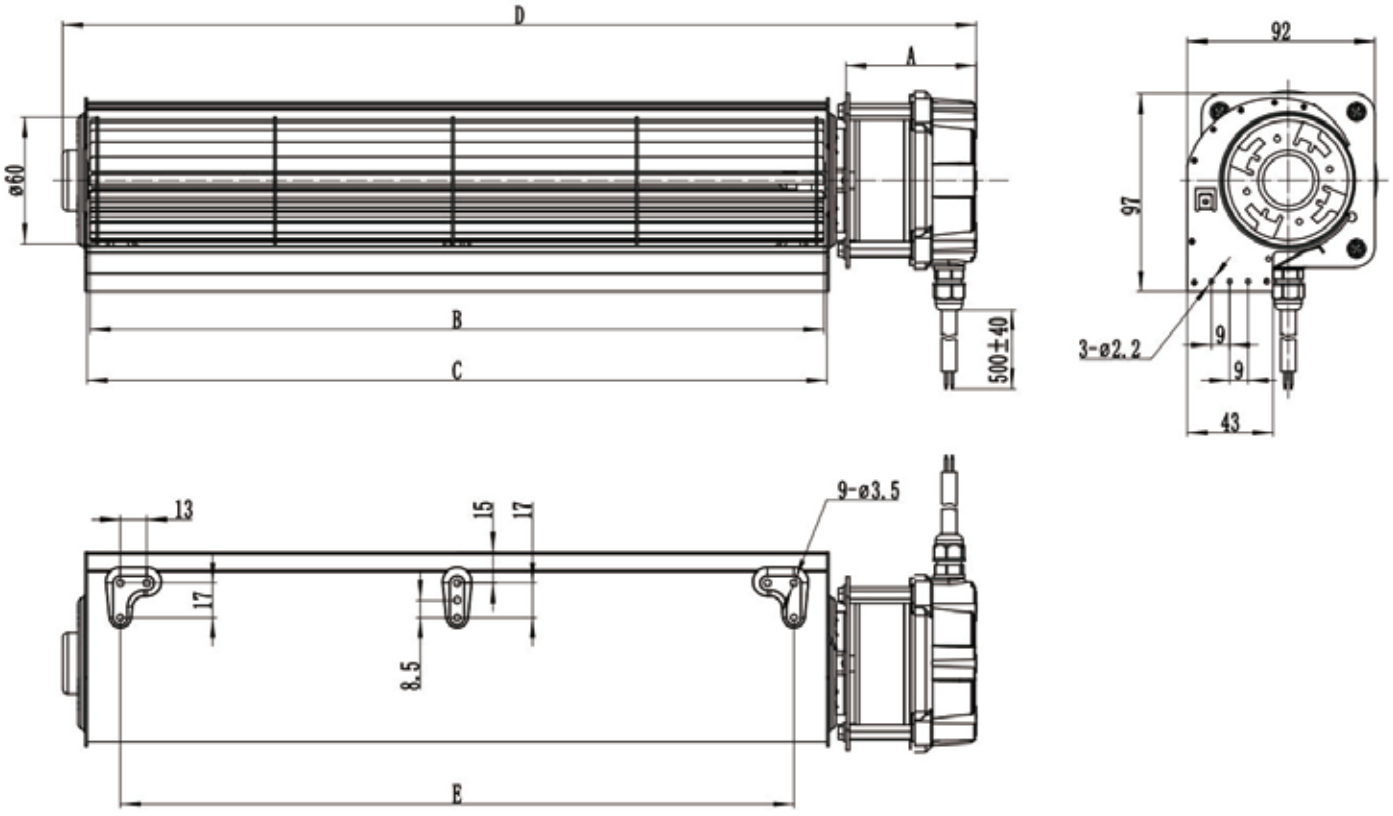

# ECM Compact Fans

## Technical Specifications

| Model | Rated Voltage | Frequency | Input Current | Max Input Power | Rated Speed | Max Airflow | Noise | Ambient Temperature |
|---|---|---|---|---|---|---|---|---|
| | VAC | Hz | A | W | r/min | m³/h | dBA | ℃ |
| ECM5312DBALAZ AS200 | 100-240 | 50/60 | 0.1 | 35 | 1700 | 500 | ≤45 | -30℃~+60℃ |
| | | | 0.15 | | 2100 | 600 | ≤50 | |

## Airflow Curves

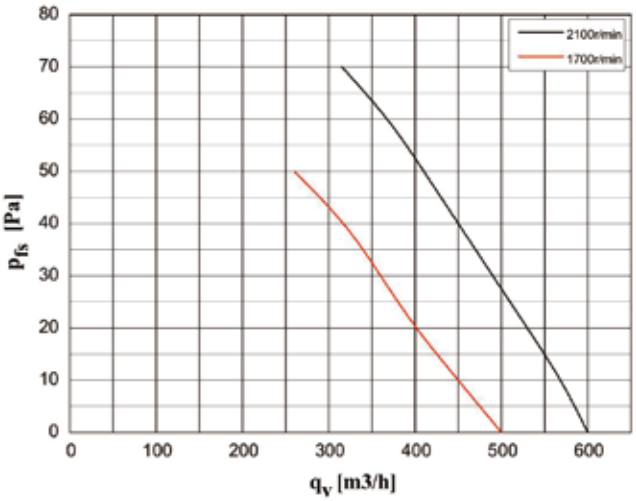


## Connection Diagram

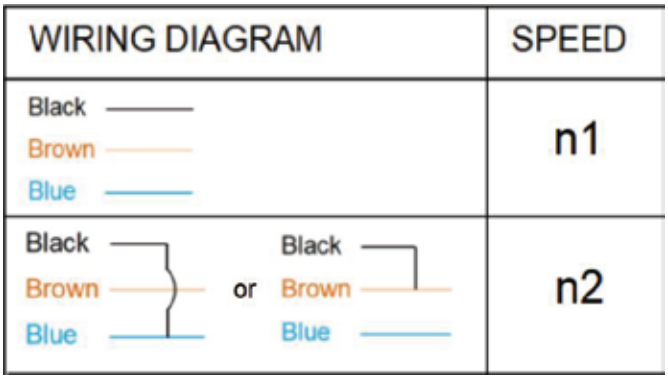


Black=Control Brown=Live Blue=Neutral

## Installation Dimensions

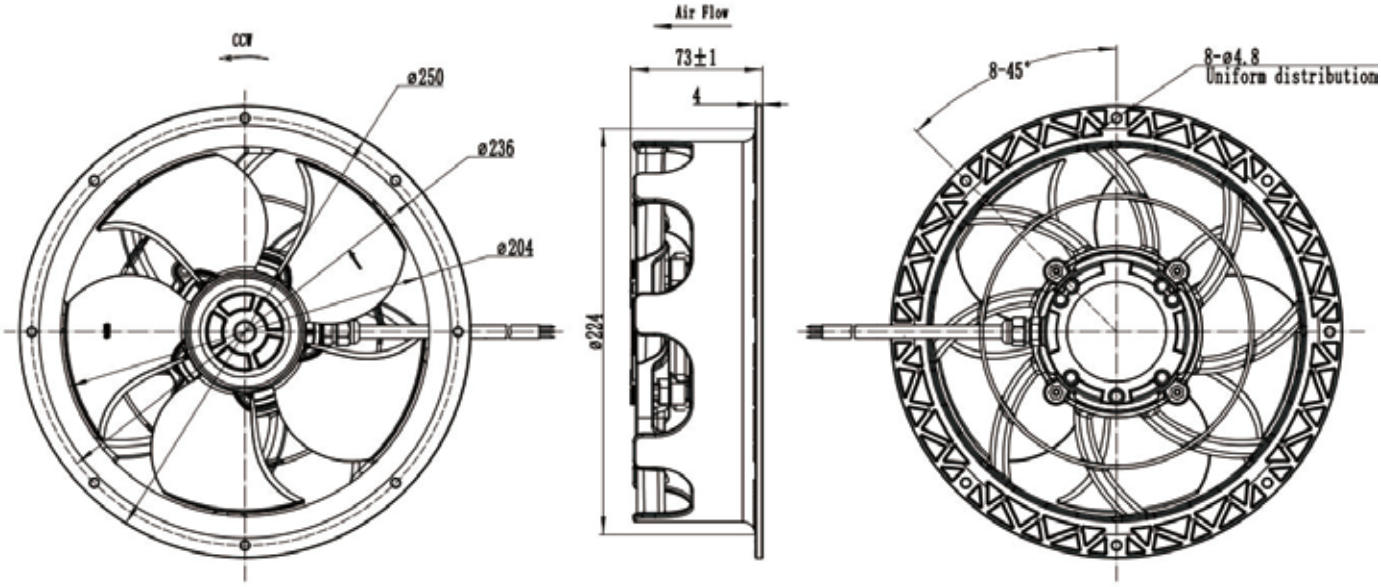

# ECM Compact Fans

## Technical Specifications

| Model | Rated Voltage | Frequency | Input Current | Max Input Power | Rated Speed | Max Airflow | Noise | Ambient Temperature |
|---|---|---|---|---|---|---|---|---|
| | VAC | Hz | A | W | r/min | $m^3/h$ | dBA | ℃ |
| ECM5312ABADAL AS200 | 100-240 | 50/60 | 0.1 | 15 | 1300 | 400 | ≤40 | -30℃~+60℃ |
| ECM5312ABADAL B170 | | | 0.1 | 15 | 1500 | 260 | ≤48 | |

## Installation Dimensions

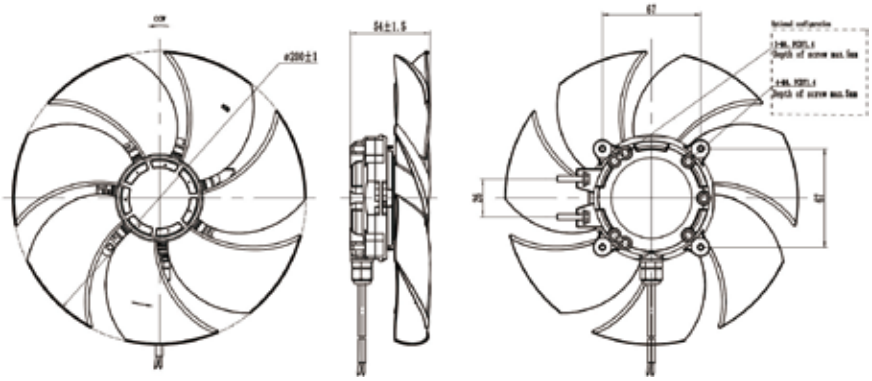

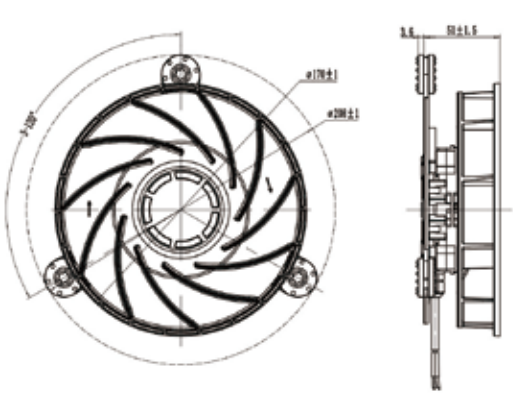

## Airflow Curve

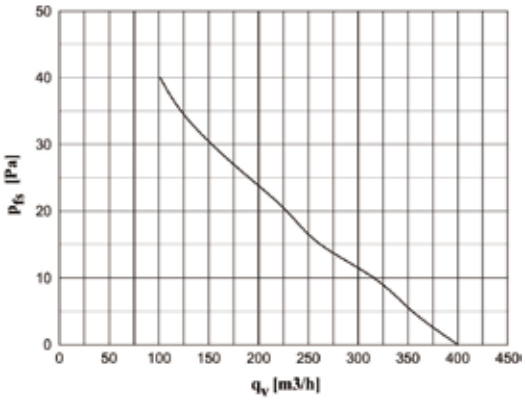


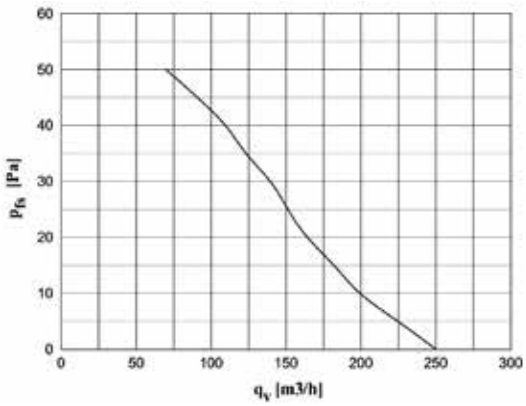

Stock Code：002801



WeChat Official Account Platform

Hangzhou Weiguang Electronic Co.,Ltd
NO.365,366 Xingzhong Road,Linping Region,Hangzhou,China
Tel: +86 0571 86240288  89166617  89186908
service@wgmotor.com